Gasketed plate-and-frame heat exchangers

Industrial line - T35, TS35, TL35, T45, T50, TS50, WideGap 350

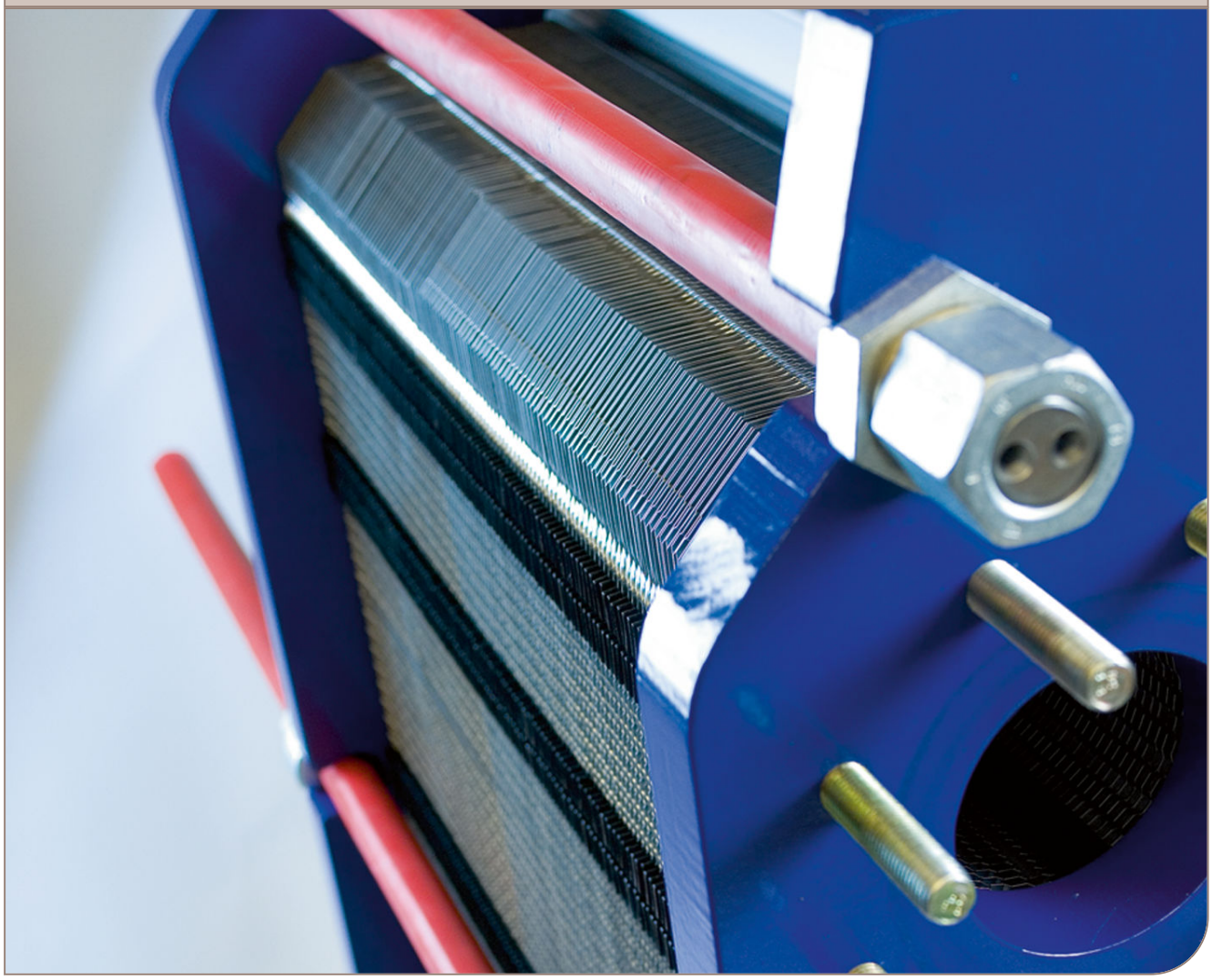

Instruction Manual

Lit. Code 200000421-1-EN-GB

Published by
Alfa Laval Lund AB
Box 74
Visit: Rudeboksvägen 1
226 55 Lund, Sweden
+46 46 36 65 00
+46 46 30 50 90
info@alfalaval.com

The original instructions are in English

© Alfa Laval Corporate AB 2019-02

This document and its contents is owned by Alfa Laval Corporate AB and protected by laws governing intellectual property and thereto related rights. It is the responsibility of the user of this document to comply with all applicable intellectual property laws. Without limiting any rights related to this document, no part of this document may be copied, reproduced or transmitted in any form or by any means (electronic, mechanical, photocopying, recording, or otherwise), or for any purpose, without the expressed permission or authorized by Alfa Laval Corporate AB. Alfa Laval Corporate AB will enforce its rights related to this document to the fullest extent of the law, including the seeking of criminal prosecution.

English

Download local language versions of this instruction manual from www.alfalaval.com/gphe-manuals or use the QR code

български

Изтеглете версиите на това ръководство за употреба на местния език от www.alfalaval.com/gphe-manuals или използвайте QR кода.

Český

Stáhněte si místní jazykovou verzi tohoto návodu k obsluze z www.alfalaval.com/gphe-manuals nebo použijte QR kód.

Dansk

Hent lokale sprogversioner af denne brugervejledning på www.alfalaval.com/gphe-manuals eller brug QR-koden.

Deutsch

Sie können die landessprachlichen Versionen dieses Handbuch von der Website www.alfalaval.com/gphe-manuals oder über den QR-Code herunterladen.

ελληνικά

Πραγματοποιήστε λήψη εκδόσεων του παρόντος εγχειριδίου οδηγιών σε τοπική γλώσσα από το www.alfalaval.com/gphe-manuals ή χρησιμοποιήστε τον κωδικό QR.

Español

Descárguese la versión de este Manual de instrucciones en su idioma local desde www.alfalaval.com/gphe-manualso utilice el código QR.

Eesti

Selle kasutusjuhendi kohaliku keele versiooni saate alla laadida lingilt www.alfalaval.com/gphe-manuals või kasutades QR-koodi.

Suomalainen

Laitaa tämän käyttöohjeen suomenkielinen versio osoitteesta www.alfalaval.com/gphe-manuals tai QR-koodilla.

Français

Téléchargez des versions de ce manuel d'instructions en différentes langues sur www.alfalaval.com/gphe-manuals ou utilisez le code QR.

Hrvatski

Preuzmite lokalne verzije jezika ovog korisničkog priručnika na poveznici www.alfalaval.com/gphe-manuals ili upotrijebite QR kod.

Magyar

Az Ön nyelvére lefordított használati útmutatót letöltheti a www.alfalaval.com/gphe-manuals weboldalról, vagy használja a QR-kódot.

Italiano

Scarica la versione in lingua locale del manuale di istruzioni da www.alfalaval.com/gphe-manuals oppure utilizza il codice QR.

日本の

www.alfalaval.com/gphe-manuals からご自分の言語の取扱説明書 をダウンロードするか、QR コードをお使いください。

한국의

www.alfalaval.com/gphe-manuals 에서 이 사용 설명서의 해당 언어 버전을 다운로드하거나 QR 코드를 사용하십시오.

Lietuvos

Lejupielādējiet šīs rokasgrāmatas lokālo valodu versijas no vietnes www.alfalaval.com/gphe-manuals vai izmantojiet QR kodu.

Latvijas

Atsisiųskite šios instrukcijos versijas vietos kalba iš www.alfalaval.com/gphe-manuals arba pasinaudokite QR kodu.

Nederlands

Download de lokale taalversies van de instructiehandleiding vanaf www.alfalaval.com/gphe-manuals of gebruik de QR-code.

Norsk

Last ned denne instruksjonshåndboken på lokalt språk fra www.alfalaval.com/gphe-manuals eller bruk QR-koden.

Polski

Pobierz lokalne wersje językowe tej instrukcji obsługi z www.alfalaval.com/gphe-manuals lub użyj kodu QR.

Português

Descarregue as versões locais na sua língua deste manual de instruções a partir de www.alfalaval.com/gphe-manuals ou use o código QR.

Português do Brasil

Faça download das versões deste manual de instruções no idioma local em www.alfalaval.com/gphe-manuals ou use o código QR.

Românesc

Versiunile în limba locală ale acestui manual de instrucţiuni pot fi descărcate de pe www.alfalaval.com/gphe-manuals sau puteţi utiliza codul QR.

Русский

Руководство пользователя на другом языке вы можете загрузить по ссылке www.alfalaval.com/gphe-manuals или отсканировав QR-код.

Slovenski

Prenesite različice uporabniškega priročnika v svojem jeziku s spletne strani www.alfalaval.com/gphe-manuals ali uporabite kodo QR.

Slovenský

Miestne jazykové verzie tohto návodu na používanie si stiahnite z www.alfalaval.com/gphe-manuals alebo použite QR kód.

Svenska

Ladda ned lokala språkversioner av denna bruksanvisning från www.alfalaval.com/gphe-manuals eller använd QR-koden.

中国

从 www.alfalaval.com/gphe-manuals 或使用 QR □下□此使用□ 明□的本地□言版本。

Table of contents

1 Preface ... 7
1.1 Conditions and Requirements ... 7
1.2 Environmental compliance ... 8

2 Safety ... 9
2.1 Safety considerations ... 9
2.2 Definitions of expressions ... 9

3 Description ... 11
3.1 Components ... 11
3.2 Name plate ... 14
3.3 Function ... 16
3.4 Multi-pass ... 17
3.5 Identification of plate side ... 17

4 Installation ... 19
4.1 Before installation ... 19
4.2 Requirements ... 20
4.3 Securing the heat exchanger before lifting ... 22
4.4 Lifting ... 23
4.5 Raising ... 25

5 Operation ... 27
5.1 Start-up ... 27
5.2 Unit in operation ... 29
5.3 Shut-down ... 29

6 Maintenance ... 31
6.1 Cleaning – Non-product side ... 31
6.2 Opening ... 33
6.2.1 Bolt configuration ... 33
6.2.2 Opening procedure ... 34
6.3 Manual cleaning of opened units ... 37
6.3.1 Deposits removable with water and brush ... 38
6.3.2 Removal, lifting and insertion of plates in the field ... 39
6.3.3 Deposits not removable with water and brush ... 39
6.4 Closing ... 40
6.5 Pressure test after maintenance ... 42
6.6 Regasketing ... 44
6.6.1 Clip-on / ClipGrip ... 44

6.6.2 Base-ad gaskets 45
6.6.3 Glued gaskets 45

7 Storage of the heat exchanger 47
7.1 Storage in packing box 47
7.2 Taken out of service 48

1 Preface

This manual provides information needed to install, operate and carry out maintenance of your gasketed plate-and-frame heat exchanger.

The following models are covered in this manual:

- T50
- TS50
- T45
- T35
- TS35
- TL35
- WideGap 350

1.1 Conditions and Requirements

Prior knowledge

The heat exchanger shall be operated by persons who have studied the instructions in this manual and have knowledge of the process. This includes knowledge of precautions regarding media type, pressures, temperatures in the heat exchanger as well as specific precautions required by the process.

Maintenance and installation of the heat exchanger shall be done by persons who have knowledge and authorization according to local regulations. This may include actions such as piping, welding and other kind of maintenance.

For maintenance actions not described in this manual, contact your Alfa Laval representative for advice.

PHE drawings

PHE (plate heat exchanger) drawings mentioned in the manual are the drawings included in the delivery of the heat exchanger.

Warranty conditions

The warranty conditions are usually included in the signed sales contract prior to the order of the delivered heat exchanger. Alternatively, the warranty conditions are included in the sales offer documentation or with a reference to the document specifying the valid conditions. If faults occur during the specified warranty period, always consult your local Alfa Laval representative for advice.

Report the date when the heat exchanger was put into operation to the local Alfa Laval representative.

Advice

Always consult your local Alfa Laval representative for advice on:

- New plate pack dimensions if you intend to change the number of plates
- Selection of gasket material if operating temperatures and pressures are permanently changed, or if another medium is to be processed in the heat exchanger

1.2 Environmental compliance

Alfa Laval endeavours to perform its own operations as cleanly and efficiently as possible, and to take environmental aspects into consideration when developing, designing, manufacturing, servicing and marketing its products.

Unpacking

Packing material consists of wood, plastics, cardboard boxes and, in some cases, metal straps.

- Wood and cardboard boxes can be reused, recycled or used for energy recovery.
- Plastics should be recycled or burnt at a licensed waste incineration plant.
- Metal straps should be sent for material recycling.

Maintenance

- All metal parts should be sent for material recycling.
- Oil and all non-metal wear parts must be taken care of in accordance with local regulations.

Scrapping

At end of use, the equipment shall be recycled according to relevant, local regulations. Besides the equipment itself, any hazardous residues from the process liquid must be considered and dealt with in a proper manner. When in doubt, or in the absence of local regulations, please contact the local Alfa Laval sales company.

2 Safety

2.1 Safety considerations

The heat exchanger shall be used and maintained in accordance with Alfa Laval's instructions in this manual. Incorrect handling of the heat exchanger may result in serious consequences with injuries to persons and/or property damage. Alfa Laval will not accept responsibility for any damage or injury resulting from not following the instructions in this manual.

Your heat exchanger should be used in accordance with the specified configuration of material, media types, temperatures and pressure for your specific heat exchanger

2.2 Definitions of expressions

WARNING **Type of hazard**

WARNING indicates a potentially hazardous situation which, if not avoided, could result in death or serious injury.

CAUTION **Type of hazard**

CAUTION indicates a potentially hazardous situation which, if not avoided, may result in minor or moderate injury.

NOTE

NOTE indicates a potentially hazardous situation which, if not avoided, may result in property damage.

Safety

3 Description

3.1 Components

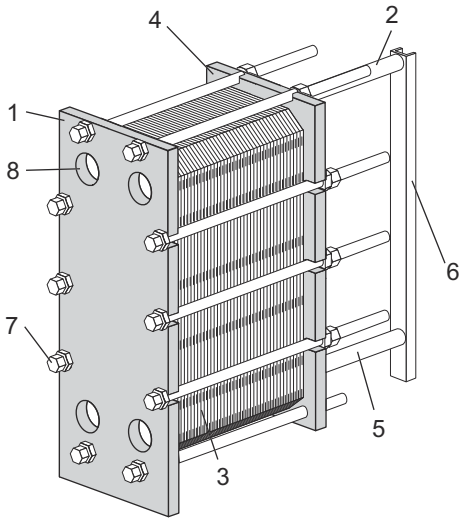

Main components

1. **Frame plate**
   Fixed plate with a various number of portholes for the connection of the piping system. The carrying and guiding bar are attached to the frame plate.
2. **Carrying bar**
   Carries the plate pack and the pressure plate.
3. **Plate pack**

   Heat is transferred from one media to the other through the plates. The plate pack consists of channel plates, end plates, gaskets and in some cases transition plates. The measurement of the plate pack is the **A** dimension, i.e the measurement between frame plate and pressure plate. Refer to the PHE drawing.
4. **Pressure plate**

   Moveable plate that can contain a various number of portholes for the connection of the piping system.
5. **Guiding bar**

   Keeps the channel plates, connection plates and the pressure plate aligned at their lower end.
6. **Support column**

   Supports carrying and guiding bars.

7. **Tightening bolts**
   Compress the plate pack between the frame plate and the pressure plate.
   The bolts with bearing boxes are identified as tightening bolts.
   Remaining bolts are used as locking bolts.

8. **Portholes**

   Portholes through the frame plate allow the media to enter into or exit from the heat exchanger.

Connections

- **Stud bolts**

  Threaded stud bolts around the portholes secure the flange connections to the apparatus.

Multi-section

- **Partition plates**

  Solid carbon steel plates used in multi-pass configurations. Strengthens the turning plate when needed.

Optional components

- **Foot**

  Gives stability and is used to secure the heat exchanger with bolts to the foundation.

- **Protection sheets**

  Cover the plate pack and protect against leakage of hot or aggressive fluids and the hot plate pack.

- **Bolt protection**

  Plastic tubes that protect the threads of the tightening bolts.

- **Insulation**

  For applications where the heat exchanger surface will be hot or cold, insulation can be used.

- **Lifting device**

  Separate device that are attached on the heat exchanger used for lifting the heat exchanger.

- **Earthing lug**

  An earthing connection is used to eliminate the risk of static electricity building up in the equipment.

- **Nozzle cover**

  Protection to avoid particles to enter into the heat exchanger during transportation.

- **Drip tray**

  Depending on the type of fluid in the heat exchanger and the type of installation, a drip tray (drainage box) may be necessary to avoid injury to personnel and damage to equipment.

- **Securing lifting or transportation**

  Locking device fastened between the frame and the pressure plate. Valid for models T50 and TS50.

3.2 Name plate

The type of unit, manufacturing number and manufacturing year can be found on the name plate. Pressure vessel details in accordance with the applicable pressure vessel code are also given. The name plate is fixed to the frame plate, most commonly, or the pressure plate. The name plate can be a steel plate or a sticker label.

WARNING

The design pressures and temperatures for each unit are marked on the name plate. These must not be exceeded.

CAUTION

Avoid aggressive chemicals for cleaning the heat exchanger when a sticker label is used.

The design pressure (11) and the design temperature (10), as given on the name plate, are the values against which the heat exchanger is approved according to the pressure vessel code in question. The design temperature (10) may exceed the maximum operating temperature (8) for which the gaskets have been selected for. If the operating temperatures as specified on the PHE drawing are to be changed the supplier should be consulted.

1. Space for logotype
2. Open space
3. Website for service
4. Drawing of possible locations of connections/Location of 3A tag for 3A units
5. Space for mark of approval
6. Warning, read manual
7. Date of pressure test
8. Maximum operating temperature
9. Manufacturer test pressure (PT)
10. Allowable temperatures Min/Max (TS)
11. Allowable pressures Min/Max (PS)
12. Decisive volume or volume for each fluid (V)
13. Locations of the connections for each fluid
14. Decisive fluid group
15. Year of manufacture
16. Serial number
17. Type
18. Manufacturer’s name

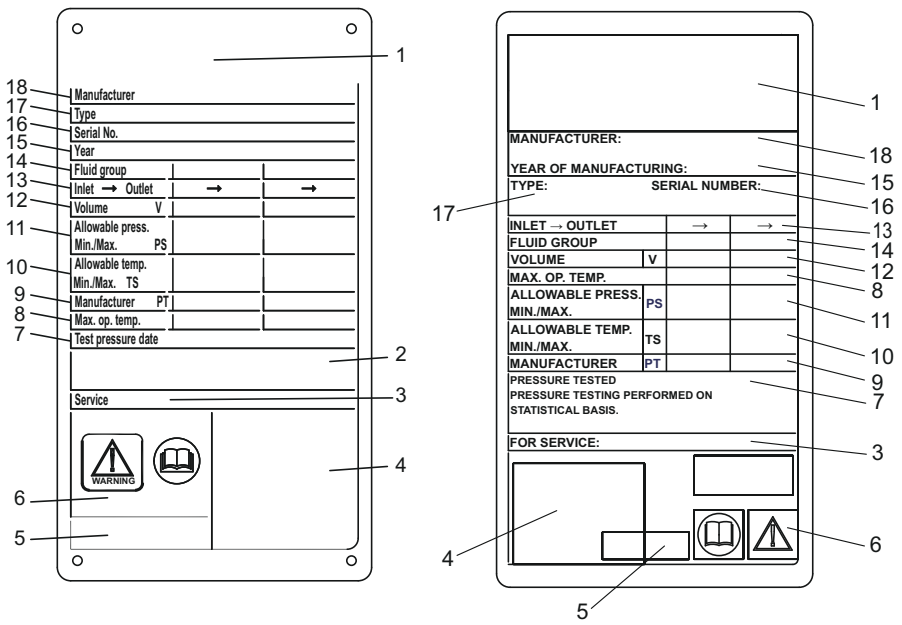

Figure 1: Example of CE metallic name plate to the left and CE sticker label name plate to the right

3.3 Function

The heat exchanger consists of a pack of corrugated metal plates with portholes for the input and output of the two separate fluids. The heat transfer between the two fluids takes place through the plates.

The plate pack is assembled between a frame plate and a pressure plate and compressed by tightening bolts. The plates are fitted with a gasket which seals the channel and directs the fluids into alternate channels. The plate corrugation promotes fluid turbulence and supports the plates against differential pressure.

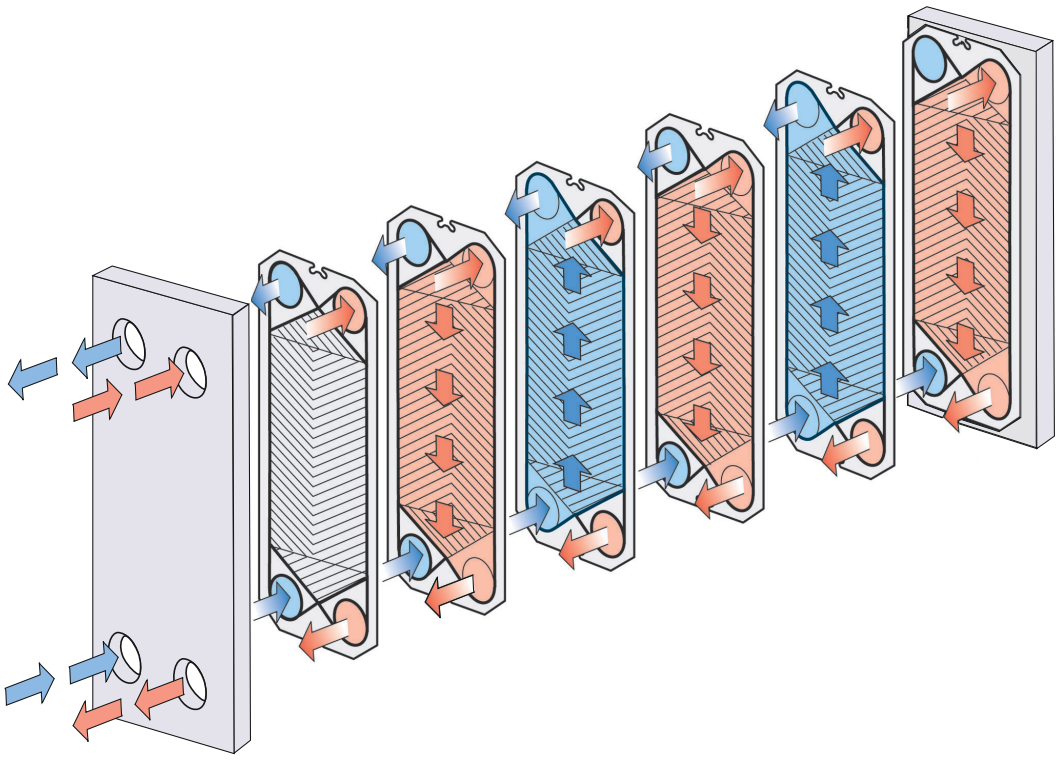

Figure 2: Example of a single-pass set up.

3.4 Multi-pass

Multi-pass sections can be created by using turning plates with 1, 2 or 3 unholed ports. The main purpose is to change the flow direction of one or both fluids.

An example of where multi-pass can be used is in processes that require longer heating periods if the media requires slower heating.

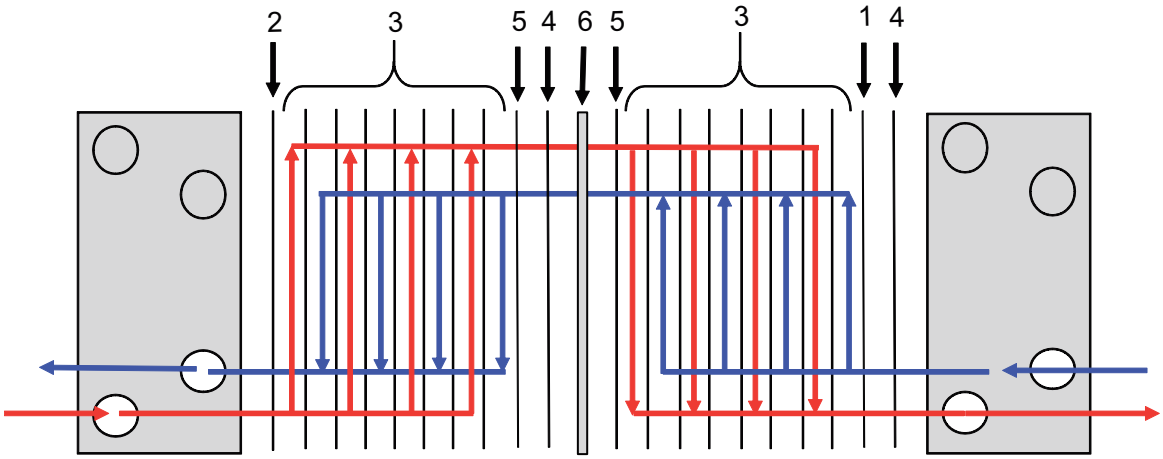

Figure 3: Example of a multi-pass set up.

1. End plate II
2. Channel plates
3. Transition plate
4. Turning plate
5. Partition plate

3.5 Identification of plate side

The A side of the plates (symmetric pattern) are identified by a stamp with the letter A and the model name at the top of the plate (refer to image 1 below).

Plates with asymmetric pattern has two possible sides for placement of the gaskets. The pattern is marked A W for the wide-side image 2 and B N for normal-side image 3.

Plates with WideGap pattern has two possible sides for placement of the gaskets. The pattern is marked A R for the wide-side (Ridge) image 2 and B V for normal-side (Valley) image 3.

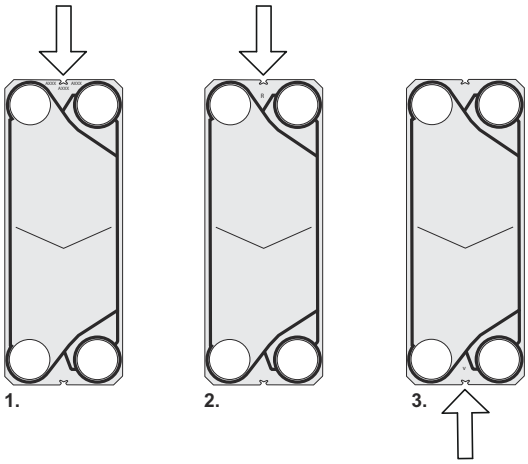

4 Installation

4.1 Before installation

CAUTION

During installation or maintenance, precautions must be taken to avoid damaging the heat exchanger and its components. Damage to components can adversely affect the performance or serviceability of the heat exchanger.

To consider before installation

- Before connecting any piping, make sure all foreign objects have been flushed out of the piping system that should be connected to the heat exchanger.
- Before connecting any piping, make sure that all the bolts for the feet are tightened and that the heat exchanger is firmly fixed to the foundation.
- Before start-up, check that all the tightening bolts are firmly tightened and that the plate pack has the correct measurements. Refer to the PHE drawing.
- When connecting the piping system, make sure the pipes do not subject the heat exchanger to stress or strain.
- To avoid water hammer, do not use fast-closing valves.
- Make sure that no air remains inside the heat exchanger.
- Safety valves shall be installed according to current pressure vessel regulations.
- It is recommended that protection sheets are used to cover the plate pack. Protect against the leakage of hot or aggressive fluids and the hot plate pack.
- If the heat exchanger surface temperature is expected to be hot or cold, take protective actions, such as insulate the heat exchanger, to avoid risk for personnel injuries. Always ensure that required actions are according to local regulations.
- Design pressures and temperatures for each model are marked on the name plate. These shall not be exceeded.

4.2 Requirements

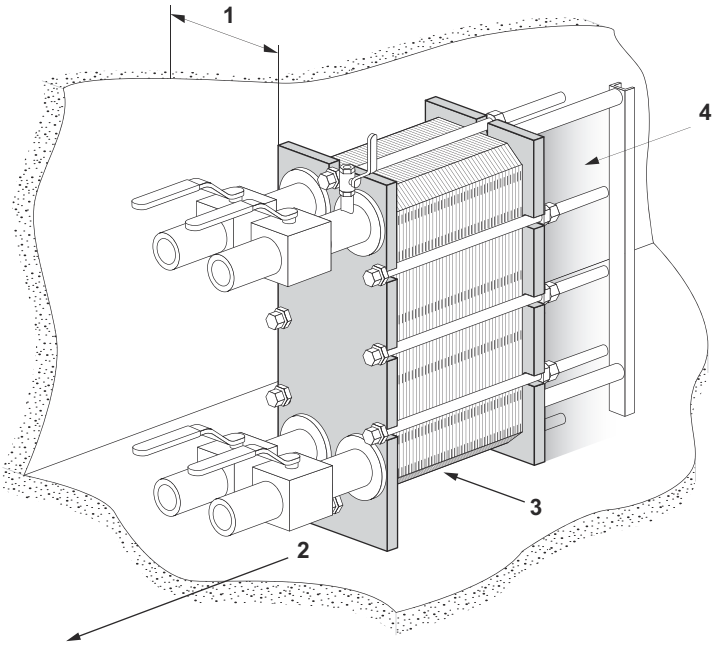

Space

Please refer to the delivered PHE drawing for actual measurements.

1. Free space is required for lifting plates in and out.
2. Free space is required under the lower tightening/locking bolt for maintenance.
3. Supports for the guiding bar may be needed.
4. Do not use fixed pipes or other fixed parts like feet, fasteners etc. inside the shaded area.

Foundation

Install on a flat foundation giving enough support to the frame.

Elbow

To make it easier to disconnect the heat exchanger, an elbow should be fitted to the connection in the pressure plate, directed upwards or sideways, and with another flange located just outside the contour of the heat exchanger.

Shut-off valve

To be able to open the heat exchanger, shut-off valves should be provided in all connections.

Connection

Different types of connections can be used to connect the piping system to the apparatus. Flanged connections shall be attached with pin bolts.

Avoid excessive loads from the piping system.

Connections in the pressure plate

It is important that the plate pack has been tightened to the correct dimension **A** (check against the PHE drawing) before the piping system is connected.

When opening the heat exchanger, the pressure plate must be moved. Do not use fixed pipes or other parts like feet, fasteners etc. inside the shaded area.

Drip tray (optional)

Depending on the type of fluid in the heat exchanger and the type of installation, a drip tray (drainage box) may be necessary to avoid injury to personnel and damage to equipment.

NOTE

Put the drip tray in place before positioning the heat exchanger.

4.3 Securing the heat exchanger before lifting

Secure the heat exchanger before lifting or transportation. Instruction below are valid for both the T50 and the TS50.

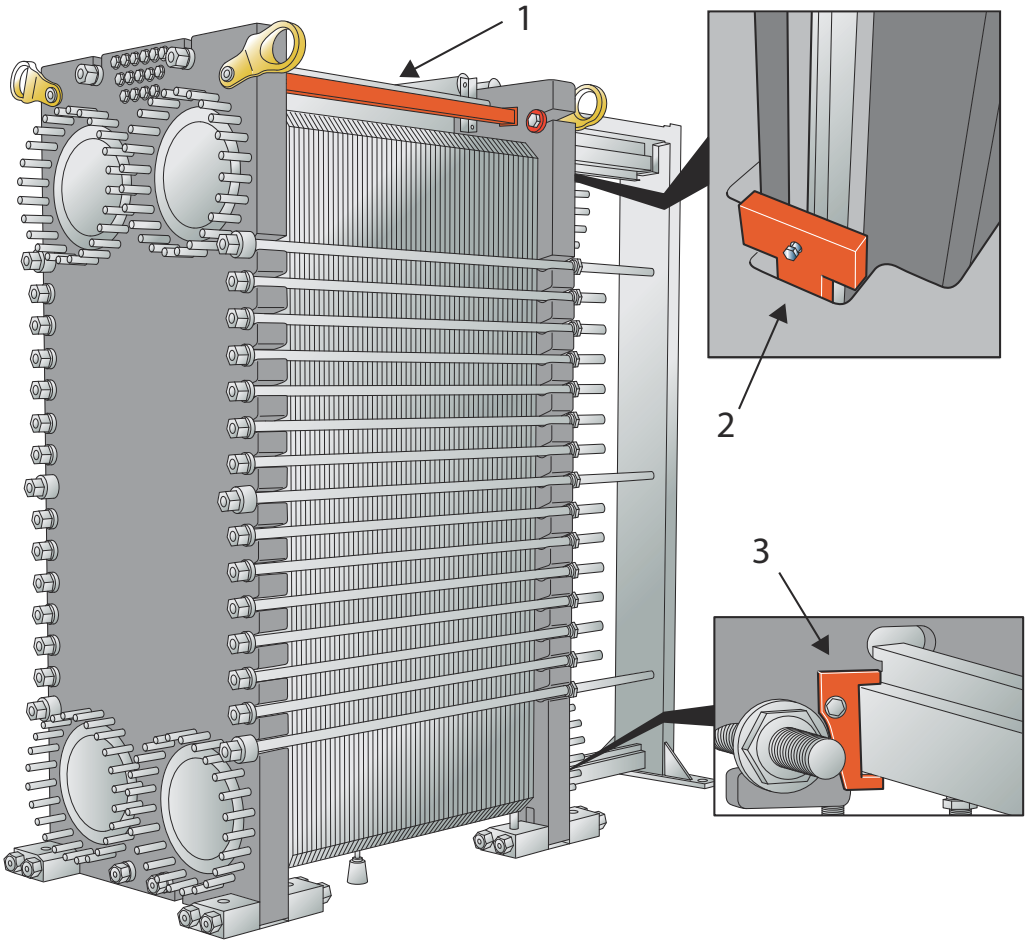

1. Fasten the locking device securely between the frame plate and the pressure plate.
2. Fasten the locking bracket to secure the pressure plate to the carrying bar.
3. Fasten the locking bracket to secure the pressure plate to the guiding bar.

4.4 Lifting

The authorized personnel are always responsible for the safety, correct selection of lifting equipment and execution of the lifting and/or raising procedure. Use undamaged straps approved for the weight of the heat exchanger. Place straps according to picture in an angle β 45° to 90°.

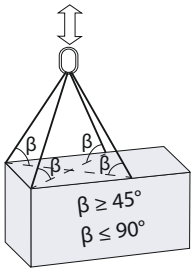

CAUTION

For straps or for lifting devices always use the attachment points marked with red rings in the below figures. Use of other attachment points or strap load directions than those described are not allowed. If the heat exchanger is not supplied with lifting devices from Alfa Laval, the corresponding equipment must be selected and the same attachment points must be used. The authorized personnel have full responsibility for selecting components and procedures in a safe and correct way. Always be careful during the lifting procedure to avoid damage to the heat exchanger components.

WARNING

Never lift by the connections or the stud bolts around them.

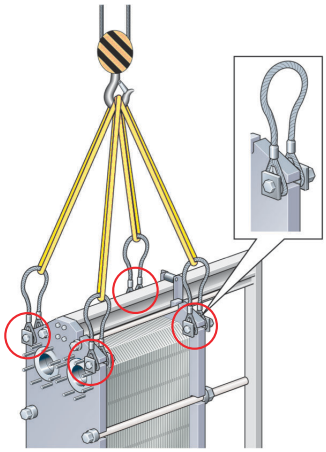

Figure 4: Lifting device for T35 and TS35. Securing equipment is needed.

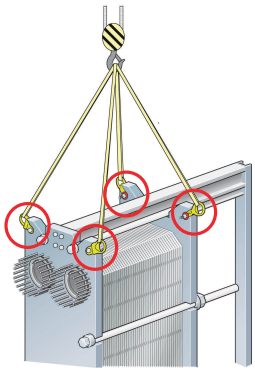

Figure 5: Lifting device for T45, TL35 and WideGap 350. Securing equipment not needed.

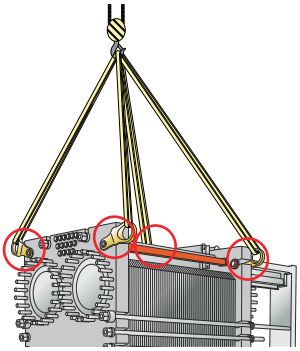

Figure 6: Lifting device for T50. Securing equipment is needed.

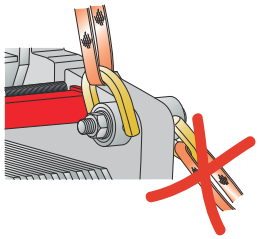

Figure 7: Lifting device for TS50. Use the four inner eyes when lifting the heat exchanger. Do NOT use the the transport securing points! Securing equipment is needed.

NOTE

For detailed information contact an Alfa Laval sales representative for document “Cargo Securing Instructions” (3490003791, 3490003792, 3490003793).

4.5 Raising

This instruction is valid when raising the heat exchanger after delivery from Alfa Laval. Only use a strap approved for the weight of the heat exchanger. Follow the principle of the instruction below.

CAUTION

The straps shall be long enough to be able to rotate the heat exchanger without obstruction. Consider especially the space for the support column. Always be careful during the raising procedure to avoid damage to the heat exchanger components.

1. Place two timber beams on the floor.

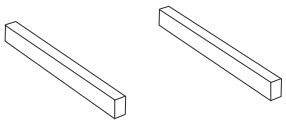

2. Lift the heat exchanger off the pallet using e.g. straps.

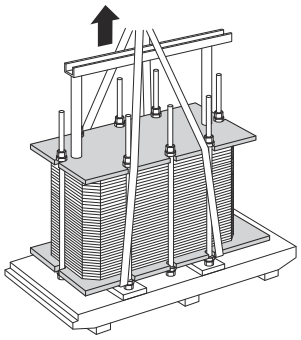

3. Place the heat exchanger on the timber beams.

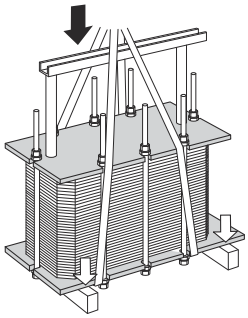

4. Place straps around one bolt on each side.

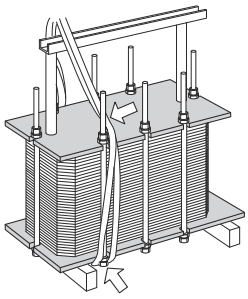

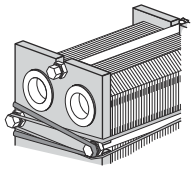

5 Lift the heat exchanger off the timber beams.

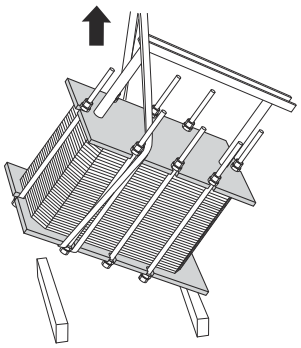

6 Lower the heat exchanger into a horizontal position and place it on the floor.

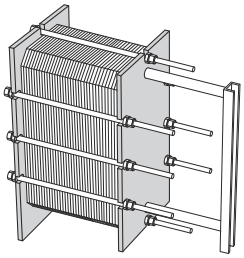

5 Operation

5.1 Start-up

During the start-up, check that there are no visible leakages from the plate pack, valves or piping system.

CAUTION

Before pressurizing the heat exchanger, it is important to ensure that the temperature of the heat exchanger is within the temperature range as stated in the PHE drawing.

CAUTION

If the temperature of the heat exchanger is below the minimum temperature for the gaskets prior to the service, it is recommended to heat the heat exchanger above this limit to avoid cold leakage.

NOTE

If several pumps are included in the system, make sure you know which one should be activated first.

Centrifugal pumps must be started with valves closed and the valves must be operated as smoothly as possible.

Do not run pumps temporarily empty on the suction side.

NOTE

Adjustments of flow rates should be made slowly in order to avoid the risk of pressure surge (water hammer).

Water hammer is a short lasting pressure peak that can appear during the start-up or shut-down of a system, causing liquids to travel along a pipe as a wave at the speed of sound. This can cause considerable damage to the equipment.

1. Before start-up, check that all the tightening bolts are firmly tightened and that the dimension **A** is correct. Refer to the PHE drawing.

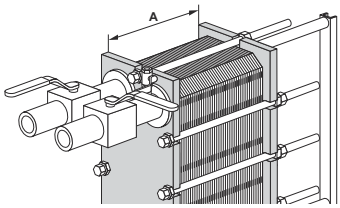

2. Check that the valve is closed between the pump and the unit controlling the system flow rate to avoid pressure surge.

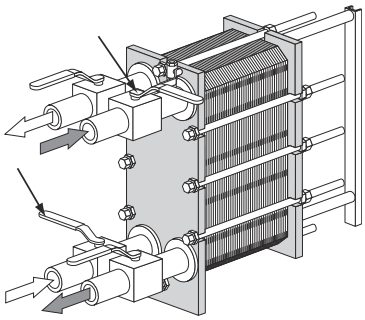

3. If there is a vent valve installed at the exit, make sure it is fully open.

4. Increase the flow rate slowly.

5. Open the air vent and start the pump.

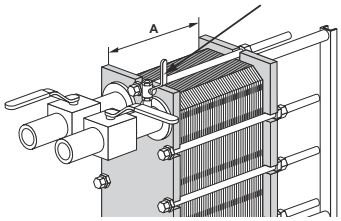

6. Open the valve slowly.

> **NOTE**
>
> Avoid rapid temperature changes in the heat exchanger. With media temperatures over 100°C, slowly increase the temperature, preferably at least for one hour.

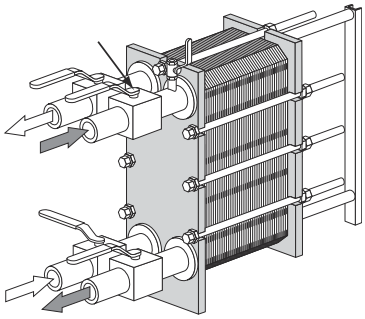

7. When all the air is expelled, close the air vent.

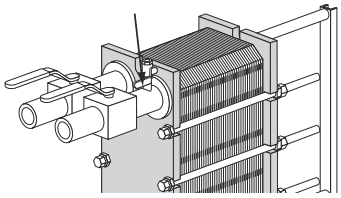

8. Repeat step *1* on page 27 to step *7* on page 28 for the second media.

5.2 Unit in operation

Adjustments of flow rates should be made slowly in order to protect the system against sudden and extreme variations of temperature and pressure.

During operation, check that media temperatures and pressures are within the limits stated on the name plate and the PHE drawing.

WARNING

In case of failures that endanger safety operation, turn off the flows to the heat exchanger in order to decrease the pressure.

5.3 Shut-down

NOTE

If several pumps are included in the system, make sure you know which one should be stopped first.

1. Slowly close the valve controlling the flow rate of the pump you are about to stop.

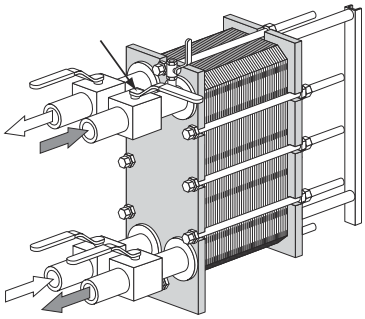

2. When the valve is closed, stop the pump.

3. Repeat step *1* on page 29 and step *2* on page 29 for the other side for the second media.

4. If the heat exchanger is shut down for several days or longer, it should be drained. Draining should also be done if the process is shut down and the ambient temperature is below the freezing temperature of the media. Depending on the media processed, it is also recommended to rinse and dry the heat exchanger plates and connections.

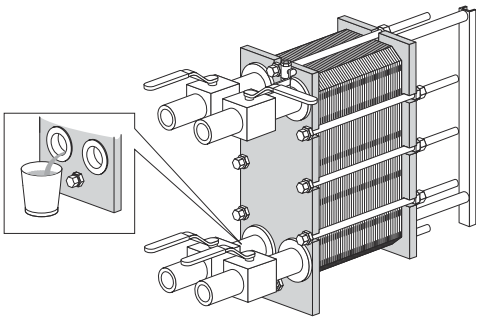

NOTE

Avoid vacuum in the heat exchanger by opening vent valves.

6 Maintenance

To keep the heat exchanger in good condition, regular maintenance is required. It is recommended to record all maintenance of the heat exchanger.

The plates need to be cleaned on a regular basis. The frequency depends on several factors such as type of media and temperature.

Different methods can be used for cleaning (refer to *Cleaning – Non-product side* on page 31) or reconditioning can be performed at an Alfa Laval service center.

After a long period of use, it can be required to regasket the heat exchanger. Refer to *Regasketing* on page 44.

Other maintenance that should be performed regulary:

- Keep the carrying bar and guiding bar clean and grease.
- Keep the tightening bolts cleaned and greased.
- Check that all the tightening bolts are firmly tightened and that the dimension **A** is correct. Refer to the PHE drawing.

6.1 Cleaning – Non-product side

The cleaning-in-place (CIP) equipment permits cleaning of the heat exchanger without opening it. The purpose of cleaning with CIP is as follows:

- Cleaning of fouling and descaling of lime deposits
- Passivation of cleaned surfaces to reduce susceptibility to corrosion
- Neutralization of cleaning liquids before draining

Follow the instructions of the CIP equipment.

WARNING

Use proper protective equipment, such as safety boots, safety gloves and eye protection, when using the cleaning agents.

WARNING

Corrosive cleaning liquids. Can cause serious injuries to skin and eyes!

CIP equipment

Contact an Alfa Laval sales representative for the size of CIP equipment.

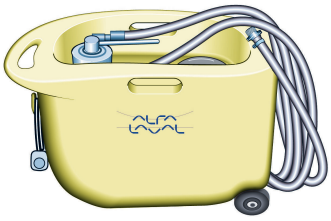

WARNING

The residuals after a cleaning procedure shall be handled according to local environmental regulations. After neutralization most cleaning solutions may be drained into the waste water system under the condition that the fouling deposits do not contain heavy metals or other toxic or environmentally dangerous compounds. Prior to disposal, it is recommended to analyze the neutralized chemicals for any hazardous compounds that were removed from the system.

Cleaning liquids

Liquid	Description
AlfaCaus	A strong alkaline liquid, for removing paint, fat, oil and biological deposits.
AlfaPhos	An acid cleaning liquid for removing metallic oxides, rust, lime and other inorganic scale. Contains repassivation inhibitor
AlfaNeutra	A strong alkaline liquid for neutralization of AlfaPhos before drainage.
Alfa P-Neutra	For neutralization of Alfa P-Scale.
Alfa P-Scale	An acidic powder cleaner for the removal of primary carbonate scale but also other inorganic scale.
AlfaDescalent	A non-hazardous acidic cleaning agent for the removal of inorganic scale.
AlfaDegreaser	A non-hazardous cleaning agent for the removal of oil, grease or wax deposits. Also prevents foaming when using Alpacon Descaler.
AlfaAdd	AlfaAdd is a neutral cleaning strengthener designed to be used with AlfaPhos, AlfaCaus and Alfa P-Scale. 0.5–1 vol% is added to the total diluted cleaning solution to provide better cleaning results on oily and fatty surfaces and where biological growth occurs. AlfaAdd also reduces any foaming.

If CIP cannot be done, cleaning must be done manually. Refer to *Manual cleaning of opened units* on page 37.

Chlorine as a growth inhibitor

Chlorine, commonly used as a growth inhibitor in cooling water systems, reduces the corrosion resistance of stainless steels (including high alloys like Alloy 254).

Chlorine weakens the protection layer of these steels making them more susceptible to corrosion attacks then they otherwise would be. It is a matter of time of exposure and concentration.

In all cases where the chlorination of non-titanium equipment cannot be avoided, your local representative must be consulted.

Water of more than 330 ppm Cl ions may not be used in the preparation of cleaning solutions.

CAUTION

Ensure that the handling of residuals after using chlorines follow local envionmental regulations.

6.2 Opening

During manual cleaning, it is necessary to open the heat exchanger to clean the plates.

NOTE

Before opening the heat exchanger, check the warranty conditions. If in any doubt, contact the Alfa Laval sales representative. Refer to *Warranty conditions* on page 7.

WARNING

If the heat exchanger is hot, wait until it has cooled down to about 40°C (104°F).

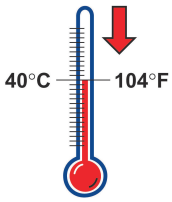

WARNING

If necessary, use proper protective equipment, such as safety boots, safety gloves and eye protection, depending on the type of media in the heat exchanger.

6.2.1 Bolt configuration

The bolt configuration of the heat exchanger varies between different models. The major force of the plate pack is held by the tightening bolts (TB). To distribute the force evenly over the frame plate and pressure plate, locking bolts (LB) are used as well. The locking bolts can be shorter and can have smaller dimensions. In the opening and closing procedure, it is important to identify the tightening bolts (TB) and the locking bolts (LB). Refer to the picture below.

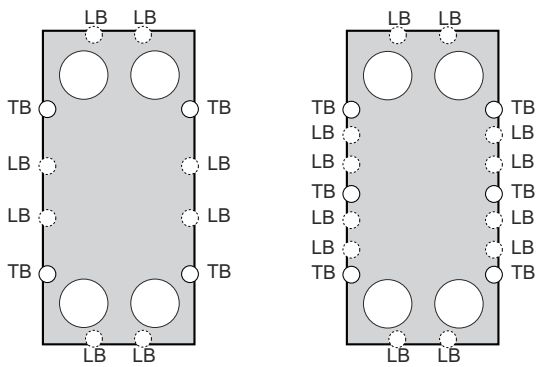

6.2.2 Opening procedure

1. Shut down the heat exchanger.
2. Close the valves and isolate the heat exchanger from the rest of the system.
3. Drain the heat exchanger.

   NOTE

   Avoid vacuum in the heat exchanger by opening vent valves.

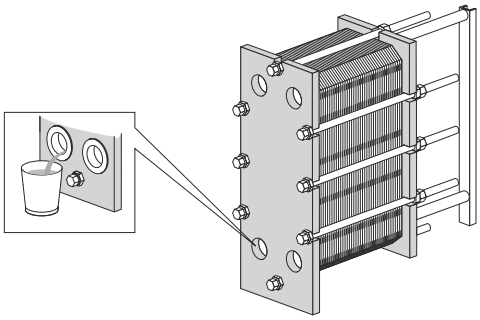

4. Remove the protection sheets, if any.
5. Dismantle pipes from the pressure plate so that the pressure plate are free to move along the carrying bar.
6. Inspect the sliding surfaces of the carrying bar and wipe clean and grease.

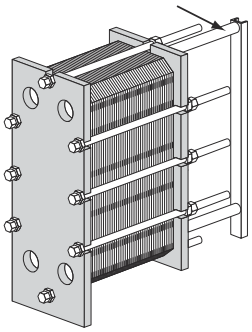

7 Mark the plate assembly on the outside by a diagonal line.

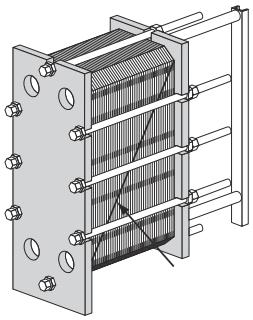

8 Measure and note the dimension.

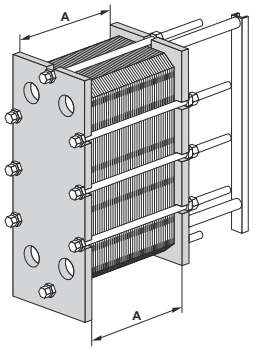

9 Only valid for T50 and TS50. Loosen and remove the locking device. Save the the locking device for reassembling.

10 Only valid for TL35, T50 and TS50. Loosen and remove the feet at pressure plate. Remove the nuts of the foundation bolts located at the outside.

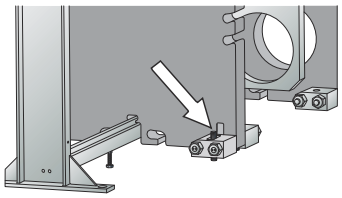

11 Remove the nuts and bolts that connect the feet against the pressure plate.

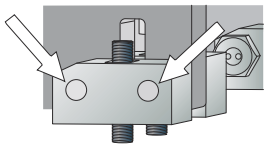

12 Remove the outer feet. The pressure plate has a slot which makes it possible to pass the protruding foundation bolt.

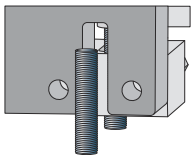

13 Only valid for T35, TS35, and T45. Loosen and remove the feet at pressure plate. Loosen the nuts of the foundation bolts located at the outside. Remove the nuts and bolts that connect the feet against the pressure plate. Rotate the outer feet.

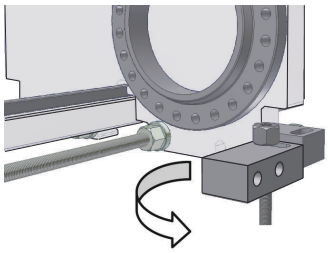

14 Loosen and remove the locking bolts. Identify them according to *Bolt configuration* on page 33.

NOTE

Brush the threads of the tightening bolts with a steel wire brush and then grease the threads before loosening the tightening bolts.

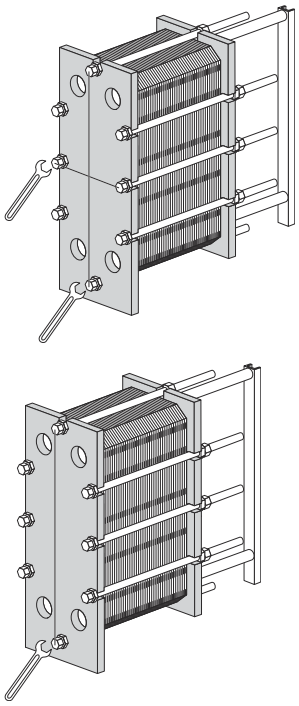

15 Use the tightening bolts, equipped with bearing boxes, to open the heat exchanger. During the opening procedure, keep the frame plate and pressure plate parallel. Skewing of the pressure plate during opening must not exceed 10 mm (2 turns per bolt) across the width and 25 mm (5 turns per bolt) vertically.

Loosen the four tightening bolts (1), (2), (3), (4) or the six tightening bolts (1), (2), (3), (4), (5), (6) diagonally until the plate pack measure is 1.05×**A** making sure that the frame plate and pressure plate are parallel while opening. Continue alternating between each bolt until all reaction forces of the plate pack have disappeared. Then remove the bolts

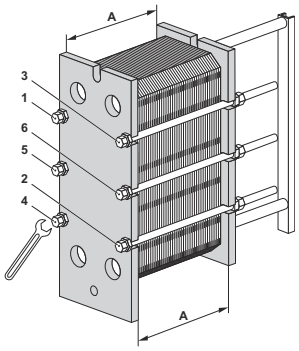

16

CAUTION

To avoid hand injuries owing to sharp edges, protective gloves should always be worn when handling plates and protection sheets.

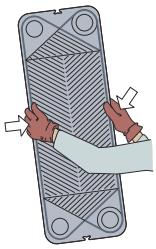

Open the plate pack by letting the pressure plate glide on the carrying bar.

If plates are to be numbered, do this before removing the plates.

Plates need not be removed if cleaning is done using only water, i.e. without a cleaning agent.

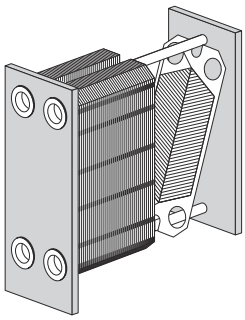

WARNING

The plate pack may still contain a small residual amount of liquid after draining. Depending on the type of product and type of installation, special arrangements, e.g. drainage box, may be necessary to avoid injury to personnel and damage to equipment.

6.3 Manual cleaning of opened units

CAUTION

Never use hydrochloric acid with stainless steel plates. Water of more than 330 ppm Cl may not be used in the preparation of cleaning solutions.

It is very important that aluminium carrying bars and support columns are protected against chemicals.

NOTE

Be careful not to damage the gasket during manual cleaning.

WARNING

Use proper protective equipment, such as safety boots, safety gloves and eye protection, when using the cleaning agents.

WARNING

Corrosive cleaning liquids. Can cause serious injuries to skin and eyes!

6.3.1 Deposits removable with water and brush

Plates do not need to be removed from the heat exchanger during cleaning.

1. Start cleaning when the heating surface is still wet and the plates are hanging in the frame.

2. Remove deposits using a soft brush and running water.

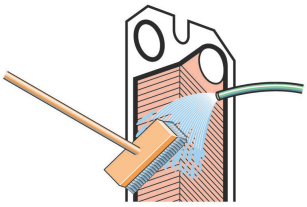

3. Rinse with water using a high pressure hose.

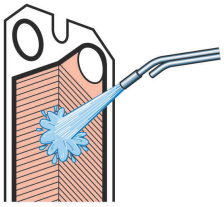

6.3.2 Removal, lifting and insertion of plates in the field

1. Open the plate pack by letting the pressure plate glide on the carrying bar.Each plate shall be removed one by one, preferably by one person on each side of the plate.For safe removal and lifting of large plates type T50, TS50 and T45 a lifting device shall be used.

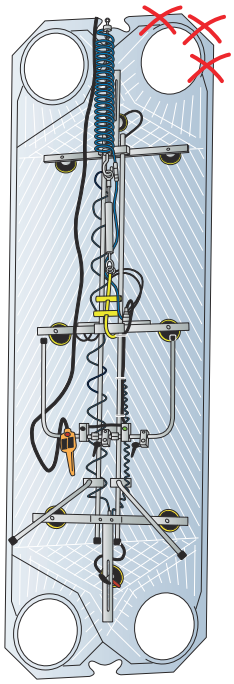

2. Lifting of a single plate shall be done in a controlled way.Insert the plates with the herring bone pattern positioned in alternate directions and with the gaskets turned towards the frame plate.

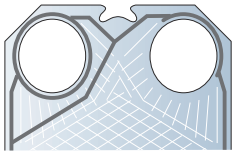

3. The plate package shall be pressed towards the frame plate in steps, preferably by using a Pusher towards the upper part of the plate.

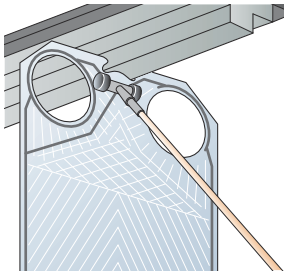

WARNING

If hard winds or risk of contamination of the plates the removal shall be made in restricted and safe environment.

To avoid sharp edges protective gloves should always be worn.

Lifting in edges around the portholes shall be avoided.

6.3.3 Deposits not removable with water and brush

Plates must be removed from the heat exchanger during cleaning. For a choice of cleaning agents, refer to *Cleaning liquids* on page 32.

1. Brush with cleaning agent.

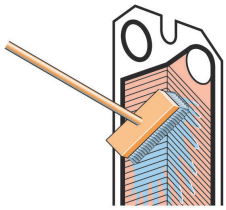

2. Rinse immediately with water.

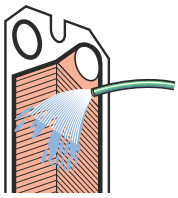

> **NOTE**
>
> Long exposure to the cleaning agents can damage the gasket glue.

6.4 Closing

Follow the instructions below to ensure that the heat exchanger will be properly closed.

For bolt identification, refer to *Bolt configuration* on page 33.

1. Check that all the sealing surfaces are clean.

2. Brush the threads of the bolts clean, using a steel wire brush or the Alfa Laval thread cleaner. Lubricate the threads with a thin layer of grease, e.g. Gleitmo 800 or its equivalent.

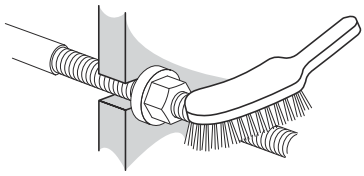

3. Attach the gaskets to the plates or check that all gaskets are properly attached. Check that all gaskets are correctly positioned in the grooves.

> **NOTE**
>
> If the gasket is wrongly positioned, it will show by the fact that it rises out of the gasket groove or that it is positioned outside the groove.

4. If the plates have been removed, insert them in alternate directions and with the gaskets turned towards the frame plate or pressure plate as specified on the plate hanging list. Use the marked line that was made when the heat exchanger was opened, refer to step 7 on page 35 in *Opening* on page 33.

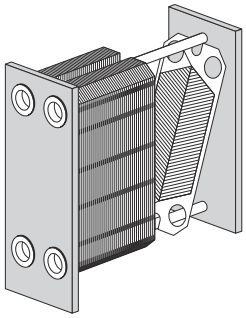

5 If the plate pack has been marked on the outside, check this (see step *7* on page 35 in *Opening* on page 33). If the plates are correctly assembled (A/B/A/B etc.), the edges form a “honeycomb” pattern, see picture.

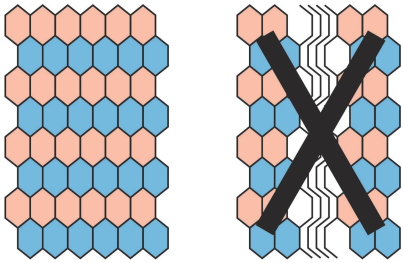

6 Press the plate pack together. Use the tightening bolts equipped with bearing boxes, to close the heat exchanger. Position the four or six tightening bolts according to the figure.

Tighten the four bolts (1), (2), (3), (4) or the six bolts (1), (2), (3), (4), (5), (6) until the plate pack measure is 1.20×**A** making sure the frame plate and pressure plate are parallel when closing.

Tighten the four bolts (1), (2), (3), (4) or the six bolts (1), (2), (3), (4), (5), (6) until the plate pack measure is 1.10×**A** making sure the frame plate and pressure plate are parallel when closing.

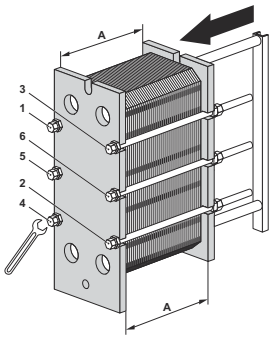

7 Tighten the four bolts (1), (2), (3), (4) or the six bolts (1), (2), (3), (4), (5), (6) evenly until dimension **A** has been reached.

When a pneumatic tightening device is used, see table below for maximum torque. Measure dimension **A** during tightening.

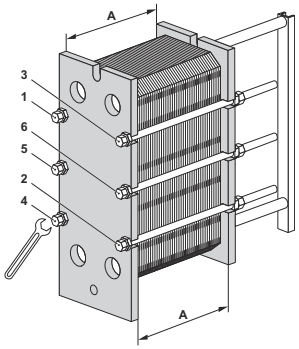

Bolt size	Bolt with bearing box		Bolt with washer	
	Nm	kpm	Nm	kpm
M39	1300	130	2000	200
M48	2100	210	3300	330
M52	2100	210	3300	330

For manual tightening, the tightening torque has to be estimated.

If dimension **A** cannot be reached:

- Check the number of plates and the dimension **A**.
- Check that all the nuts and bearing boxes are running freely. If not, clean and lubricate, or replace.

8. Mount the remaining locking bolts and check measurement **A** on both sides, top and bottom.

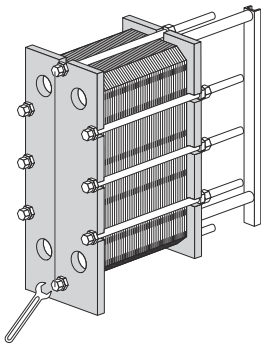

9. Mount protection sheets (if provided).
10. Connect pipes.
11. If the heat exchanger does not seal when measurement A has been reached, it can be tightened further to **A** minus 1.0%.
12. Assembly the feet to the pressure plate.
13. For T50 and TS50 assembly the locking device.

6.5 Pressure test after maintenance

Neither of these processes are allowed unless performed by a person authorized according to local laws and regulations and following applicable standards. If no such person is internally available, a third party authorized entrepreneur working per local legislation using proper equipment shall be engaged.

Before the start-up of production, whenever plates or gaskets have been removed, inserted or exchanged, it is strongly recommended to perform a hydrostatic leakage test to confirm the internal and external sealing function of the heat exchanger. In this test, one media side at a time must be tested with the other side open to the ambient pressure. In a multi-pass set up, all sections of the same side must be tested simultaneously. The recommended test time is 10 minutes for each media side.

⚠ CAUTION

The recommended pressure for the leakage test is a pressure equal to the operating pressure + 10% of the actual unit but never above the allowable pressure (PS) as stated on the name plate.

WARNING

Testing by putting gas (compressible media) under pressure can be very dangerous. Local laws and regulations regarding to the hazard involved in testing with a compressible medium must be respected. Hazardous examples are explosion risk due to uncontrolled medium expansion and/or suffocation risk due to oxygen depletion.

WARNING

Any rebuilding or modification of the heat exchanger is the responsibility of the end user. Regarding recertification and pressure test (PT) of the heat exchanger the local laws and regulations for in service inspection must be respected. Example of a rebuilding is that more number of plates are added to the plate pack.

If there is any uncertainty about the testing procedure of the heat exchanger, consult an Alfa Laval representative.

6.6 Regasketing

The procedures below concern field gaskets, ring gaskets and end gaskets.

NOTE

Before removing the old gaskets, check how they are attached.

6.6.1 Clip-on / ClipGrip

1. Open the heat exchanger, refer to *Opening* on page 33, and remove the plate that is to have a new gasket.

   NOTE

   Before opening the heat exchanger, check the warranty conditions. If in any doubt, contact the Alfa Laval sales representative. Refer to *Warranty conditions* on page 7.

2. Remove the old gasket.

3. Make sure that all sealing surfaces are dry, clean and free of foreign matter such as fat, grease or similar.

4. Check the gasket and remove rubber residual before attaching it.

   NOTE

   Especially the end plate gasket!

5. Attach the gasket to the plate. Slip the gasket tabs under the edge of the plate.

   NOTE

   Make sure the two gasket prongs are in the correct position.

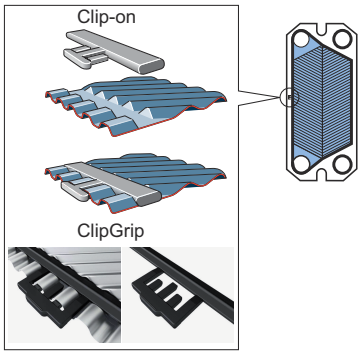

6. Repeat the procedure until all plates that are needed to be regasketed are done. Close the heat exchanger according to *Closing* on page 40.

6.6.2 Base-ad gaskets

The Base-ad gasket represents a system with fastening by means adhesive tape.

The use of the adhesive tape (GC1) is a simple way to obtain secure gasket positioning. It is adhered to the gasket groove by means of a special tape gun, making it easy to apply the tape exactly where wanted.

1. **NOTE**

   Before opening the heat exchanger, check the warranty conditions. If in any doubt, contact an Alfa Laval sales representative. Refer to *Warranty conditions* on page 7.

   Open the heat exchanger (refer to *Opening* on page 33) and remove the plate that is to have a new gasket.

2. Remove the old gasket.

3. It is not necessary to remove old tape as the film is very thin. Make sure, however, that the gasket groove is clean and dry.

4. Adhere tape, using the tape gun.

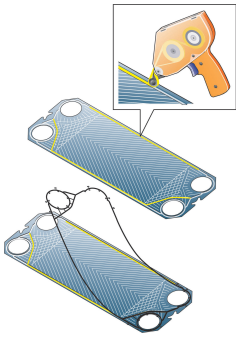

5. Attach the gasket to the plate.

6. Close the heat exchanger according to *Closing* on page 40.

6.6.3 Glued gaskets

Use glue recommended by Alfa Laval. Separate gluing instructions will be delivered together with the glue.

CAUTION

Other glues than those recommended can contain chlorides that can damage the plates.

CAUTION

Do not use sharp tools when removing the glued gasket to avoid damage to the plates.

7 Storage of the heat exchanger

Alfa Laval delivers the heat exchanger ready to be put into service upon arrival, if nothing else has been agreed. Nevertheless, keep the heat exchanger in the packing box until installation.

If storing for longer periods of time, such as one month or longer, certain precautions should be made to avoid unnecessary damage to the heat exchanger. Refer to *Outdoor storage* on page 47 and *Indoor storage* on page 47.

NOTE

Alfa Laval and its representatives reserve the right to inspect the storage space and/or equipment whenever necessary until the expiration of the warranty period stipulated in the contract. Notification must be given 10 days prior to the date of inspection.

If there is any uncertainty about the storage of the heat exchanger, consult an Alfa Laval representative.

7.1 Storage in packing box

If storage of the heat exchanger after delivery is known in advance, inform Alfa Laval when ordering the heat exchanger to ensure that it will be properly prepared for storage before packing.

Indoor storage

- Store inside a room with the temperature between 15 and 20°C (60–70°F) and humidity up to 70%. For outdoor storage read *Outdoor storage* on page 47.
- To prevent damage to the gaskets, there should not be any ozone-producing equipment in the room such as electric motors or welding equipment.
- To prevent damage to the gaskets, do not store organic solvents or acids in the room and avoid direct sunlight, intensive heat radiation or ultraviolet radiation.
- The tightening bolts should be well covered with a thin layer of grease. Refer to *Closing* on page 40.

Outdoor storage

If you need to store your heat exchanger outdoors, follow all the precautions in *Indoor storage* on page 47 as well as the precautions listed below.

The stored heat exchanger shall be visually checked every third month. When closing the packing it shall be restored to original condition. The check includes:

- Greasing of the tightening bolts
- Metal port covers
- Protection of the plate pack and gaskets
- The packing

7.2 Taken out of service

If, for any reason, the heat exchanger is shut down and taken out of service for a long period of time, follow the precautions in *Indoor storage* on page 47. However, before storage the following actions must be done.

- Check the measurement of the plate pack (measure between frame plate and pressure plate, the **A** dimension).
- Drain both media sides of the heat exchanger.
- Depending on media, the heat exchanger should be rinsed and then dried.
- The connection should be covered if the piping system is not connected. Use a plastic or plywood cover for the connection.
- Cover the plate pack with non-transparent plastic film.

Start-up after long-term out of service

If the heat exchanger has been taken out of service for an extensive period of time, longer than one year, the risk of leakage when starting up increases. To avoid this problem it is recommended to let the gasket rubber rest to regain most of its elasticity.

1. If the heat exchanger is not in position, follow the instructions in *Installation* on page 19.
2. Note the measurement between frame plate and pressure plate (**A** dimension).
3. Remove the feet attached to the pressure plate.
4. Loosen the tightening bolts. Follow the instructions in *Opening* on page 33. Open the heat exchanger until the plate pack measure is 1.25×**A**.
5. Leave the heat exchanger for 24–48 hours, the longer the better, for gaskets to relax.
6. Re-tighten according to the instructions in *Closing* on page 40.
7. Alfa Laval recommends a hydraulic test should be carried out. The media, usually water, should be entered at intervals to avoid sudden shocks to the heat exchanger. It is recommended to test up to the Design Pressure. Refer to the PHE drawing.